Effectiveness of Online and ICT Resources for Strengthening Science Education

Dr. Rita Sinha

Dr. Kandarpa Kumar Sarma

1. Introduction:

Physical isolation and lack of development are one of the primary factors that have put restrictions on the proper growth of science education in India. Seeds of development have not reached uniformly to all sections of the society, which have created a distinct barrier between educated and uneducated with special focus on science. Further, asymmetrical distribution of resources and lack of quality teachers have also imposed restrictions on expansion of science education. However, it has been observed that the ill effects of these constraints maybe regulated and mitigated largely by the use of information and communication technologies (ICT). Of late, the unprecedented growth of ICT in forms of personal computers (PC), laptop, handheld wireless devices etc have added new dimensions to the teaching learning process. People increasingly prefer the use of ICT because of its popularity and the convenience of use at anytime and anywhere. The primary advantage that such tools offer to education is the re-usability aspect along with interactive learning. This is more relevant for distance and self-learners. The computational power of the current generation PC/ laptops coupled with access to resources via secured and reliable data links have provided the learner new vistas of acquiring knowhow and skills through online mode. Lately, with the popularisation of 3G/ 4G wireless communication and concurrent use of wired data connection with higher speeds have enable uniform remote access to learning resources and these have become more efficient, lively and user centric. There has been significant rise in storage space availability which have permitted archival, retrieval and distribution of learning resources in all forms viz text, audio, video, graphics and so on.

This research paper focuses on case studies related to people involved or interested in the planning, development and implementation of science education programmes. The case studies in this work demonstrate the potential and importance of ICT in distance learning

approaches in enhancing science education. Similarly, the science literacy programmes based on functional and developmental themes have been successful in enhancing learning. This has been significantly strengthened by the use of ICT resources. Another important outcome is that distance-learning approaches can be effective in changing people's attitudes/ behaviour and in motivating rural and under-privileged communities to undertake action leading to the improvement of their socio-economic conditions. The rate of growth of GDP of India can be increased if the students at large can be educated with science, which can be achieved through various organisations using online and ICT resources and open learning methods.

In this paper, we focus on a detailed literature review outlining the recent advances in the use of ICT in science education. Further, the paper discusses two approaches of ICT based learning outlining advantages and disadvantages.

2. Literature Review:

Here we include a summary of the researches related to the application of ICT in education in general and science in particular.

In [1], the authors reported the study of e–learning system in virtual learning environment to develop creative thinking for learners in higher education. In [2], the authors expressed that there is great potential in applying a 3D virtual lab based games to support teaching and learning in science. In [3], the authors designed triple learning model Pedagogy Environment Attitude (PEA) based on ICT and constructive learning strategy in teaching science and increasing scientific literacy level of the students at schools and universities. In [4], the authors reported students' misconceptions in science could be reduced through application of ICT. In [5], the authors report a method to learn contemporary concept of biological and environmental education at primary schools with ICT support. In [6], the authors analyzed the effect of virtual biotechnology labs as an educational tool in supporting students to increase their active learning process. In [7], the authors report the importance of mobile learning and opined that it is the future of education in Nigeria and many developing countries. In [8], the authors have implemented and discussed a remote triggered light microscope to facilitate biology and biotechnology students with equipment access. In [9], authors proposed an integrated structure of virtual laboratory (VL) setup to conduct online laboratory sessions for UG/ PG level courses of

engineering programmes. In [10], the authors provide information on encouraging the desired improvement in the future teaching situation with integration of ICT into science education.

In [11], the authors have attempted to review the state of science education today, the impact of ICT use on the curriculum, pedagogy and learning, and the implications for future practice. In [12], the authors attempt to analyze the use of ICT in science education. In [13], the authors examined the attitude to the use of ICT and a new kind of science (NKS) for learning science among undergraduates. In [14], the authors aim to have teachers' perceptions about their roles may serve to support or oppose the integration of new practices while using ICT. In [15], the authors presented a Virtual lab called it MASTERS Virtual Lab, an innovative solution to developing and enhancing lab practice and access for distance learners, and as a means of providing training and experience for teaching Lab. In [16], the authors investigated teachers' and educational consultants' perceptions of ICT integration in certain schools, specifically about the benefits and challenges of ICT integration therein. In [17], the authors present a glimpse of meaning of ICT, its importance and its mandatory need for education, which is indispensable. In [18], the authors discussed the roles of ICT in education. In [19], the authors examined the role of ICT in teaching science education.

In [20], the authors has emphasized to understand the impact of ICT on science learning to enhance motivation collecting sample of 100 secondary school students of secondary level. In [21], the authors present the long-term research results of the motivational effect of communication technologies on connectionist technology in science education using design-based research. In [22], the authors designed Science Motivation Scale (SMS) questionnaire incorporating ICT tools to evaluate the changes of perceived levels of motivation among secondary students participated in a Problem-based Learning (PBL) programme. In [23], the authors examined the contributions of the four disciplines - Science, Technology, Engineering and Mathematics (STEM) and integration with ICT tools. In [24], the authors report the learning effectiveness and motivational appeal of a computer game for learning computer memory concepts. In [25], the author reports a study that sought to explore the pedagogical reasoning behind the use of ICT in secondary teachers' classes. In [26], the authors aim at finding out the factors influencing use of ICT to make teaching learning effective in higher institutions of learning. In [27], the authors report that Computer

Science (CS) courses with ICT issues have positive effects on attitudes and beliefs of the students regarding the intended learning content.

In [28], the authors dispel some of the myths of computer tools and give specific guidelines for assessing their usage, taking into account the special needs of a developmental biology class and the difficulties of observing all the developmental stages of subject organisms in the timescale of class meetings. In [29], the authors embarked on a National Mission project, India to build over 150 Virtual Labs (VL) targeting over 1450 experiments mapped to the under graduate and postgraduate curriculum as part of a VL Collaborative and Accessibility Platform (VLCAP) to simulation and remote-triggered VL. In [30], the authors presented two virtual electric circuit laboratories designed and developed within the Science Education Cosmos-Evidence-Ideas framework. In [31], the authors described a virtual 3D lab created using Open Wonderland to enable simultaneous execution of different computer science simulator modules in a collaborative, immersive workspace.

In [32], the authors reported case studies based on the deployment of 20 web-based virtual labs with more than 170+ online experiments in Biotechnology and Biomedical engineering discipline. In [33], the authors report the quality improvement envisaged in education in India using massive open online courses (MOOC). In [34], the authors report the use of MOOC platforms. In [35], the authors report that MOOCs based on Open Educational Resources (OER) might be one of the most versatile ways to offer access to quality education, especially for those residing in far or disadvantaged areas. In [36], the authors reported the case of online and ICT based programs embracing students from diverse geographical areas, academic backgrounds, and professional pursuits is the essence of open learning. In [37], the authors report that there the divergence in the concept of a MOOC and the principles explored in the academic literature, and the emerging MOOC offerings. In [38], the authors present a model of laboratory framework for the student that was developed by the use of ICT to conduct experiments on the internet employing a virtual environment based on LabVIEW.

3. Proposed System Model for ICT based Science Education:

The use of ICT in science education requires a systematic design of methods and approaches which shall be beneficial to students. Presently, the trend is towards better interaction with less human intervention.

Two models may be adopted for incorporating ICT facilities for improving science education. The first model revolves around a teacher and the other model involves the use of multimedia repository. In the first model (Figure 1), the learners log into an ongoing classroom session at a distant institute. Here, a teacher is the focal point. He/ she may be taking a class on a topic at a distant location. The remote interaction maybe carried out while conducting a theory class or a lab session. Experimental aspects maybe incorporated by using specific software like LabView.

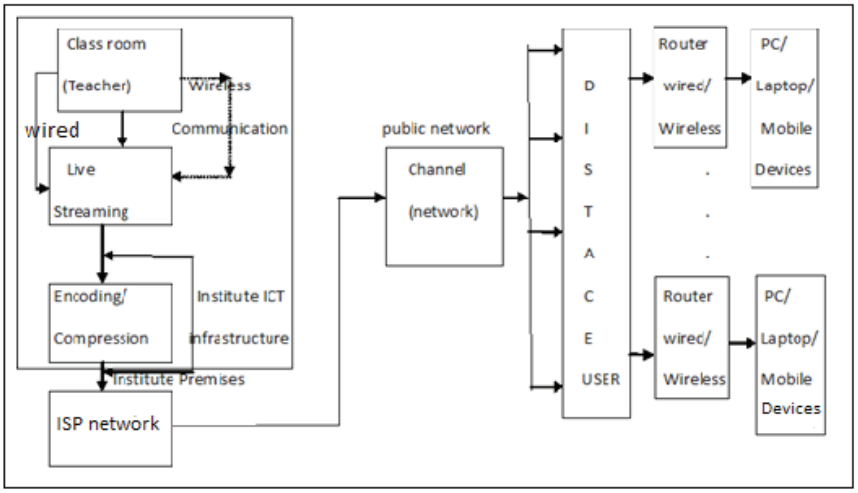

Figure 1: First approach of use of ICT for higher education

The content may be streamed or telecasted live using wired or wireless channels inside an institute premises. Students need not be present in the classroom. They may be inside their hostel rooms or anywhere else but with an ICT device like a laptop, computer, personal computer or a tablet. They contents shall come to them after they login to the system. Provisions may be made to capture the interactions/ lectures delivered by the teacher in the device of the student. This procedure can even cover laboratory sessions. The primary advantage of the approach is its reach and uniform distribution of the academic material. If a student is not inside the campus, he/ she may access the session remotely using linkages provided by an internet service provider (ISP). Here, all the day-to-day deliberations of a course inside a class or lab may be attended and retained by a student from a remote location. For this, the classroom should have multimedia capturing tools and content transmission/ reception systems. Present day wireless network like 3G and 4G can well support such mechanisms. Inside a campus,

optical fibre connections used as backbones to hostels shall provide better quality. With high-speed links of 3G/ 4G wireless systems and optical fibre based systems, the deliberations in a remote class or lab can be made interactive. Such types of mechanisms are in practice in most IITs, Anna University, IGNOU, Amrita University etc.

In the second approach, there is no teacher. This is shown in Figure 2. A repository of text and multimedia content provides the learner all the resources necessary for continuous learning and development. The repository includes course structures, contents, grades, multimedia reusable learning resources, quiz etc. These may include courses of basic sciences, engineering, technology, biological science, mathematical science, social science etc. A student choosing a programme may choose a relevant course and go through the contents. If he/ she feels that the learning in one go is no sufficient the reusable learning resource may be used repeatedly until the concepts are clear. Self-evaluation may be done using quiz contents. This way the knowhow levels may be greatly enhanced. This mechanism requires a high-end computer system with sufficient storage space and a high-speed internet connection. All learning resources may be stored into the computer system and access to remote users can be permitted through firewalls and public IPs. The mechanism may be made available 24X7 by using uninterrupted power supply with extended backup.

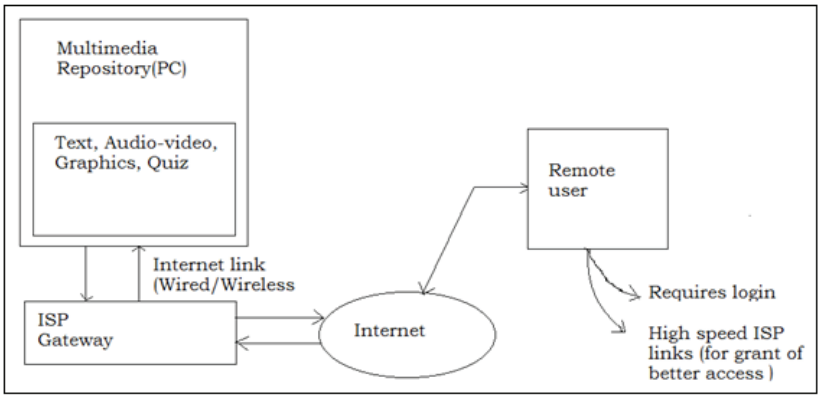

Figure 2: Second approach of use of ICT for higher education

Examples as NPTEL, MOOCs, IGNOU, ePathsala (UGC), MIT Online Courseware and so on. Next, we discuss about the advantages and disadvantages of both the modules. In the first approach, if the students remain absent in online, then can reference the repository for further

knowledge at a later time. In addition, they can use the repository repeatedly for better understanding. Similarly, the advantages of the second approach are that the system provides as the tools and resources for a smoother learning. The manual intervention is not part of the method. However, both approaches are dependent on bandwidth, memory, computational cycles etc, which imposes certain economic constraints. Further, with changes in the technology, the resources are required to be updated for both the approaches a backup mechanism is always required.

However, the advantages are far more beneficial. Potential benefits from the use of ICT for science learning have been reported in several research studies. ICT and new technologies can be used in science education to enable students to collect science information and use apps like Byjus, TopRankers, Toppr and Khanacademy to encourage communication and understanding of basic science. Moreover, ICT contents can be used as pedagogical resource while training science teachers. In most cases it is seen that ICT tools makes the learning of science modular, easy, interesting and makes gathering of knowledge learner-centric.

4. Use of ICT and Virtual Reality for lab based Course:

ICT has been effective used to conduct online lab experiments. This is reported in [9, 15, 29]. ICT has also been used to strengthen STEM subjects. Virtual labs are more preferred tools nowadays for the purpose. Further 3D method of learning based on ICT have also become popular and are preferred for science education. This is reported in [2, 31]. The most notable aspect of these tools has been the fact that a student can repeatedly use the facilities until the concepts are clear. This improves the understanding. In addition, simulation is a common approach adopted to learn STEM and Computer Science based subjects. With the use of ICT, the learning through simulation has been made more interesting and interactive as reported in [29].

The use of ICT tools have continuously focused on the use of virtual reality techniques for enhanced learner experience [23, 24]. Most of these tools being are simulation based allow the students to learning and explore concepts of STEM subject. Using these tools students can apply their creativity and expand their horizon. The experience of learning using creative application of virtual reality tools enhances the understanding levels. Recent experiments by Google suggests that in

subjects like Physics, Chemistry, Biology, all branches of engineering etc, the use of virtual reality has enhanced learning levels [23, 24]. Further, it has been found that virtual reality tools are useful while dealing with students with traumatic experiences. Stress levels of students have been found to be reduced due to the use of virtual reality tools. Students learning with virtual reality tools have been found to deal with anxiety levels better. Student specific personalized and customized tools maybe tailored to meet the requirements of the learner. Renowned virtual reality platforms like Google Cardboard facilitate widespread use of such tools in classrooms of different levels.

Educationally, virtual reality tools have transformed the level of understanding earlier confined to a book to the realms of creativity. These have revolutionized the experience of learning. Lately, a few virtual reality apps are ushering in far reaching changes in STEM education. StarChart is one such app, which (with over 20 million users) enables understanding of the universe in such a manner, which was unknown earlier. It allows students to interact with stellar bodies and enjoy a deep space exploration. Google Translate is a language learning aid helping students to interact with resource persons despite language barriers. Cleanopolis helps students to understand environment pollution and provides a gaming approach to devise measures to make the atmosphere clean. InMind helps to understand functioning of the neurons and brain tissues. Apollo 11 VR takes the student to a space odyssey. Further, it helps in understanding the challenges and significance of space expeditions. Students of geography, remote sensing, geology etc can extract help from Earth AR. It presents multiple views of the earth using unseen angles. Biology and medicals students can understand concepts better using Anatomy 4D to study the human body. EON Experience packs everything required to explore from physics to history. From preloaded content, teaching or learning virtual reality sessions can be created. Most of the above-mentioned tools can be made part of the above-mentioned approaches of science education.

5. Conclusion:

In this paper, we have focused on a detailed literature review outlining the possibilities arising out of the advances in the use of ICT in science education. Further, the paper discussed two approaches of ICT based learning outlining advantages and disadvantages. The work also discussed about the approach that maybe adopted for lab based

courses, which are essential for science education. Though there are several benefits and the approach reduces the disparity in spread of education facilitating learning in far-flung corners of the country, it is heavily reliant on technology, which has a critical dependence on power and ability to use effectively. It is expected that in the near future, power scenario in the country will improve significantly and the use of ICT by a larger section of the society will be possible. In such a backdrop ICT, based science education shall truly help in social development and economic growth.

Details of Reviewed Literature:

1) N. Songkrama, "E–learning system in virtual learning environment to develop creative thinking for learners in higher education", Elsevier Ltd, Vol 174 (2015) pp674 – 679.
2) D. Liu, P. V. Díaza, G. Riofrioa, Y.M. Sunb and R. Barbaa, "Integration of Virtual Labs into Science E-learning", International Conference on Virtual and Augmented Reality in Education, Procedia Computer Science vol75 (2015) pp 95 – 102
3) M. S. Al-Rsa'i1 and A. Hussien, Ma'an, "Promoting Scientific Literacy by Using ICT in Science Teaching", http://dx.doi.org/10.5539/ies.v6n9p175 (2013)
4) J. Kola , "Effective Teaching and Learning in Science Education through ICT", IOSR Journal of Research & Method in Education (IOSR-JRME), Volume 2, Issue 5 (2013), PP 43-47
5) J. Přinosilová , E. Mechlová and S. Kubicová, "ICT on Four Levels of Inquiry-Based Science Education in Environmental Education" , ICTE Journal , 2013, vol 2(1): pp 17-32
6) R. Radhamani, H. Sasidharakurup, G. Sujatha, B. Nair, K. Achuthan, and S. Diwakar, "Virtual Labs Improve Student's Performance in a Classroom", LNICST 138, pp. 138–146, 2014.
7) O. O. Ogundipe, O. J. Omotosho, O. Awodele and N. Goga , "Influence of Mobile VL on Mobile Learning: Case Study of a Higher Institution in Nigeria", International Journal of Computer and Information Technology , Volume 04 – Issue 03, May 2015
8) D. Kumar, H. Singanamala,B. Nair, K. Achuthan, S. Diwakar and S. Srivastava , "Implementing a Remote-Triggered Light Microscope: Enabling Lab Access via VALUE Virtual labs", 2014, Copyright 2014 ACM 978-1-4503-2908-8/14/08

A. Mahanta and K. K. Sarma, "Online Resource and ICT-Aided VL Setup", International Journal of Computer Applications (0975 – 8887) Volume 52 – No. 6, 2012.

9) K. A. Bingimlas , "Barriers to the successful integration of ICT in Teaching and learning Environment: A review of the literature", Eurasia Journal of Mathematics, Science and Technology Education 2009 5(3), pp 235-245
10) J. Osborne and S. Hennessy, "Literature Review in Science Education and the Role of ICT: Promise, Problems and Future Directions" , A NESTA Futurelab Research report - report 6, 2007

11) M. Salihi, "The Use of ICT in Science Education", Global Educational Research Journal, Vol. 3(2): pp 258-264, 2015
12) F. Aladejana, "The Implications of ICT and NKS for Science Teaching: Whither Nigeria", Complex Systems, 17 (2007) 113–124,2007
13) M. B. Technion, Y. Nissim and D. Ben-Zvi, "Aptness between Teaching Roles and Teaching Strategies in ICT-Integrated Science Lessons", Interdisciplinary Journal of E-Learning and Learning Objects Volume 7, 2011, pp 305-321.
14) S. Soni, M.D.Katkar and G.H.Raisoni , "Survey paper on Virtual Lab for E-Learners", IJAIEM Volume 3, Issue 1, January 2014 ISSN 2319 – 4847
15) J. Rabah, "Benefits and Challenges of Information and Communication Technologies (ICT) Integration in Québec English Schools", TOJET: The Turkish Online Journal of Educational Technology – April 2015, volume 14 issue 2
16) Meenakshi, "Importance of ICT in Education", IOSR Journal of Research & Method in Education (IOSR-JRME), Volume 1, Issue 4 (May–Jun. 2013), PP 03-08
17) F. Mikre , "The Roles of Information Communication Technologies in Education Review Article with Emphasis to the Computer and Internet" , J. Educ. & Sc. Vol. 6 No 2
18) H. Abdullahi, "The role of ICT in teaching science education in schools", International Letters of Social and Humanistic Sciences, Vol. 19, pp 217-223.
19) N. Banerjee and A. Das, "Impact of Ict on Science Learning To Enhance Motivation of Secondary Level Students: An Analytical Study", IOSR-JHSS, Volume 19, Issue 7, Ver. VII 2014, PP 19-23
20) E. Trnova and J. Trna, "Motivational Effect of Communication Technologies in Connectivist Science Education", Online Journal of Communication and Media Technologies Volume: 5 – Issue: 3 2015
21) N. K. Thoe, S. S. Thah and F. S. Fook, "Development of a Questionnaire to Evaluate Students' Perceived Motivation towards Science Learning Incorporating ICT Tool", Malaysian Journal of Educational Technology Volume 10(1), pp. 39-55, 2010
22) C. V. McDONALD, "STEM Education: A review of the contribution of the disciplines of science, technology, engineering and mathematics", Science Education International Vol. 27, Issue 4, 2016, pp 530-569
23) M. Papastergiou, "Digital Game-Based Learning in high school Computer Science education: Impact on educational effectiveness and student motivation", www.elsevier.com vol 52 (2009) pp 1–12
24) Bertram and B. Waldrip, "ICT for ICT's sake: Secondary teachers' views on technology as a tool for teaching and learning", Australian Educational Computing, 2013, 28(1).
25) G. Ali, F. A. Haolader and K. Muhammad, "The Role of ICT to Make Teaching-Learning Effective in Higher Institutions of Learning in Uganda", International Journal of Innovative Research in Science, Engineering and Technology Vol. 2, Issue 8, 2013 pp 4061-4073
26) M. N. Giannakos, "Exploring Students Intentions to Study Computer Science and Identifying the Differences among ICT and Programming Based Courses", TOJET 2014, volume 13 issue 3,pp 68-78
27) R. K. Scheckler, "Virtual labs: a substitute for traditional labs?", Int. J. Dev. Biol. 47: 231-236, 2003

28) P. Nedungadi, R. Raman, K. Achuthan and S. Diwakar, "Virtual Labs Collaborative & Accessibility Platform (VLCAP)", Proceedings of The 2011 IAJC-ASEE International Conference ISBN 978-1-60643-379-9, Paper 276
29) T. Athanasios, A. Molochidis, H. Euripides and P. Dimitrios, "Enhancing Science Education: the Model-space and Web-based Virtual Electric Circuit Laboratories", Fourth International Conference on Modern Circuits and System Technologies
30) Branovic, R. Popovic, N. Jovanovic, R. Giorgi, B. Nikolic and M. Zivkovic, "Integration of simulators in virtual 3D computer science classroom", 2014 IEEE Global Engineering EDUCON 2014, page 1164-67.
31) S. Diwakar, D. Kumar, R. Radhamani, H. Sasidharakurup, N. Nizar, K. Achuthan, P. Nedungadi, R. Raman, and B. Nair, "Complementing Education via Virtual Labs: Implementation and Deployment of Remote Laboratories and Usage Analysis in South Indian Villages", iJOE – Volume 12, Issue 3, 2016
32) R. Hiremath, "SWAYAM: The dream of Indian MOOC", IJARIIE, Vol-2 Issue-3 2017 pp 242-247
33) Chauhan, "An Overview of MOOC in India", IJCTT – Volume 49 Issue 2 2017,pp111-120
34) T. Daradoumis , R. Bassi, F. Xhafa and S. Caballe, "A Review on Massive ELearning (MOOC) Design, Delivery and Assessment", PGCIC, 2013 Eighth International Conference on , vol., no. 2830, pp.208-213, 2013
35) R. Chakravarty and J. Kaur, "MOOCs in India:Yet to Shine", International Journal of Information Studies & Libraries Volume 1, Issue 1, 2016 pp 14-21
A. C. Laverde, N. Hine and J.A. M. Silva, "Literature and Practice: A Critical Review of MOOCs", Comunicar, n. 44, v. XXII, 2015 Pages 09-17
36) Mahanta and K.K. Sarma, "ICT-Enabled Labview based Laboratory for Remote Access Applications", ITEEE ISSN 2319 – 2577, Vol-1, Issue-2, 2012